1	CHANGED AUXILIARY SWITCH WIRE COLORS	08AUG16	WJR

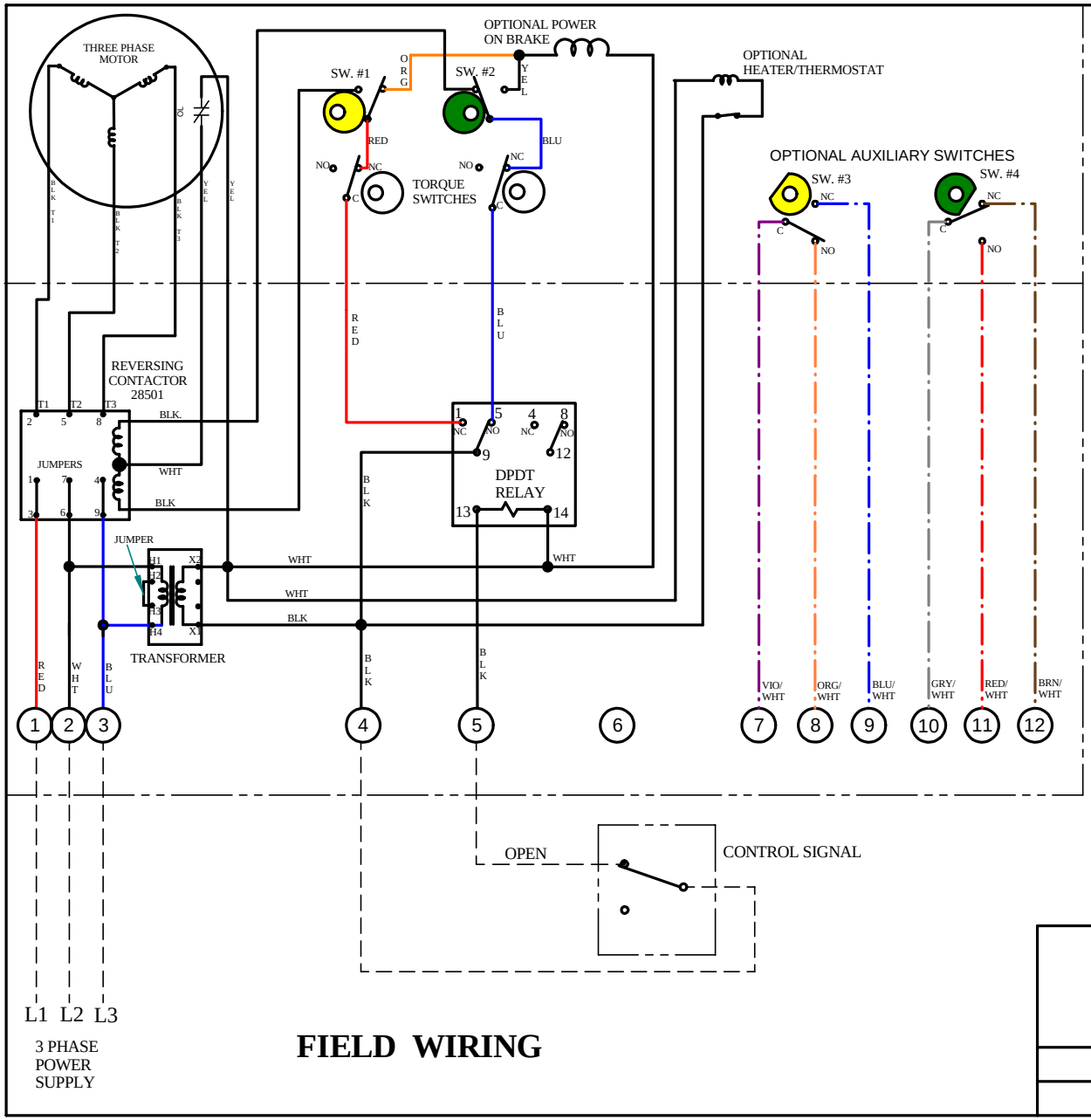

FIELD WIRING

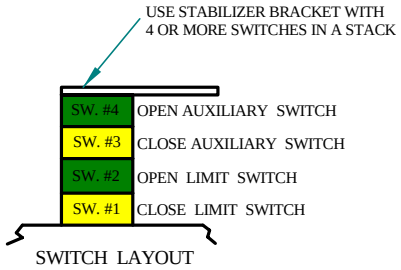

NOTES:
1) IF UNIT RUNS BACKWARDS, SWAP 2 BLACK WIRES TO THE REVERSING CONTACTOR COILS.
2) ACTUATOR SHOWN IN THE OPEN POSITION.

ICI	Indelac Controls, Inc. Florence, KY 41042
	WIRING DIAGRAM, "K" 3 PHASE ACTUATOR WITH, REV. CONTACTOR, TRANSFORMER IN EXTERNAL ENC., WIRED FOR 2 WIRE OPERATION
	W150827 — B
	WJR — 27AUG15